L F SCHMIDT
LICENSE
No. 43409
STATE OF FLORIDA
PROFESSIONAL ENGINEER

Digitally signed by Lyndon F Schmidt
Date: 2026.07.16 09:13:22 -04'00'

This item has been digitally signed and sealed by **L. F. Schmidt, P.E.** on the date adjacent to the seal.

Printed copies of this document are not considered signed and sealed and the signature must be verified on any electronic copies.

THIS PRODUCT APPROVAL IS VALID ONLY FOR THE STATE OF FLORIDA

ODL, Inc.

EXTRUDED PVC DOORGLASS ASSEMBLY FOR GLAZING UP TO A 3'0 x 8'0 DOOR PANEL "NON-IMPACT"

GENERAL NOTES

1. This product has been evaluated and is in compliance with the 9th Edition (2026) Florida Building Code (FBC) structural requirements excluding the High Velocity Hurricane Zone (HVHZ).
2. When used in areas requiring wind borne debris protection this product is required to be protected with an impact resistant covering that complies with FBC Sections 1609.1.2 & R301.2.1.2.
3. This product is approved for use as a substitute doorglass assembly in conjunction with a glazed fiberglass side hinged swing door and/or fixed sidelite possessing a comparable current Florida Statewide product approval.
4. The design pressure (DP) rating shall be the lesser of the DP rating shown on sheet 1 of this approval or the DP rating shown in the glazed fiberglass side hinged swing door or fixed sidelite approval being used.
5. The door panel and lite opening size shall not exceed the sizes shown in this approval or the glazed fiberglass side hinged swing door or fixed sidelite approval being used.
6. The accompanying door approval shall be a glazed door product meeting the following minimum requirements:

   SINGLE GLAZED FIBERGLASS DOOR:

   A. 1-3/4" minimum panel thickness.
   B. Fiberglass face sheet: 0.087" min. thickness (Fy min. = 4,025 psi)
   C. Stiles: Pine 1.53" x 1.18"
   D. Rails: Composite 1.53" x 0.94"
   E. Foam Core (FBC Approved): Polyurethane (min. 2.0 lbs./cu.ft) or Polystyrene (min. 1.0 lbs./cu.ft)

TABLE OF CONTENTS

SHEET#	DESCRIPTION
1	Typical elevations, design pressures and general notes
2	Horizontal and vertical cross sections
3	Anchoring locations & bill of materials

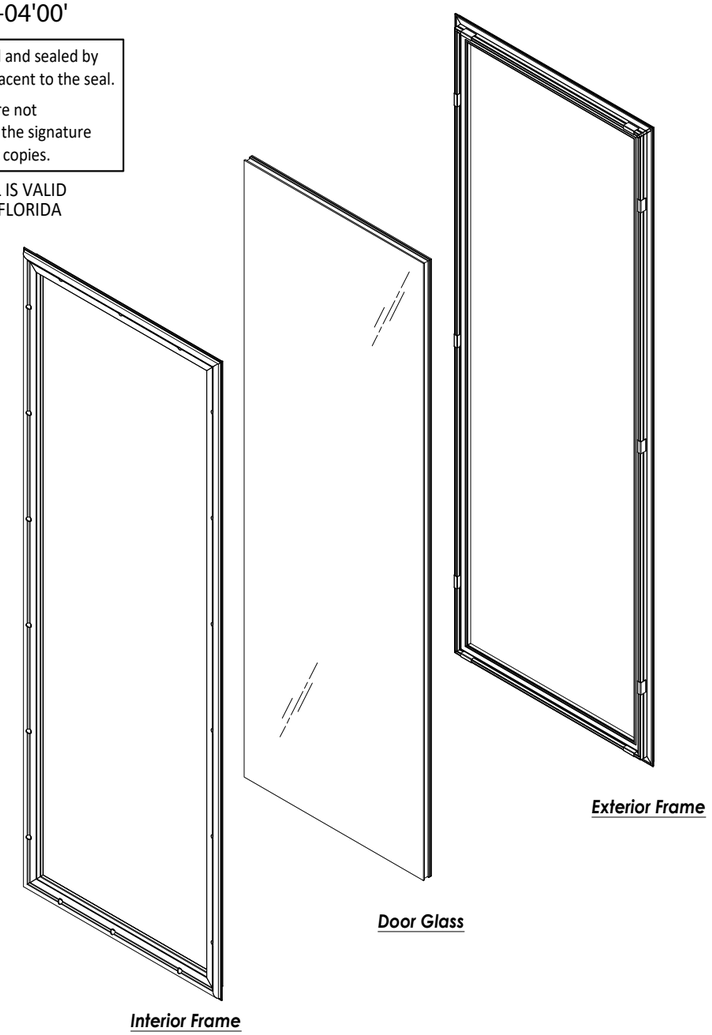

LIGHT DETAIL

DESIGN PRESSURE RATING (PSF)		
GLAZING TYPE TEMPERED	POSITIVE	NEGATIVE
1" INSUL.	+60.0	-60.0

Documents Prepared By:
Lyndon F. Schmidt
P.E. No. 43409
RW BUILDING CONSULTANTS, INC.
P.O. Box 230, Valrico, FL 33595
Phone No.: 813.659.9197
FBPE Registry No. 9813

PRODUCT: ODL LITE FRAME

PART OR ASSEMBLY: TYPICAL ELEVATIONS, DESIGN PRESSURES & GENERAL NOTES

NO.	DATE	REVISIONS	BY
5	7/01/26	UPDATE TO 9TH ED. (2026) FBC	LFS
4	7/01/23	UPDATE TO 8TH ED. (2023) FBC	LFS
3	8/05/20	UPDATE TO 7TH ED. (2020) FBC	DAC
2	9/26/17	UPDATE TO 6TH ED. (2017) FBC	JK
1	3/28/15	UPDATE TO 5TH ED. (2014) FBC	JK

DATE: 2/29/12
SCALE: N.T.S.
DWG. BY: JK
CHK. BY: LFS
DRAWING NO.: FL-15260.6
SHEET 1 OF 3

© 2012 R.W. Building Consultants Inc.

G:\ODL\FL-15260 R12\FL-15260.6-7.dwg

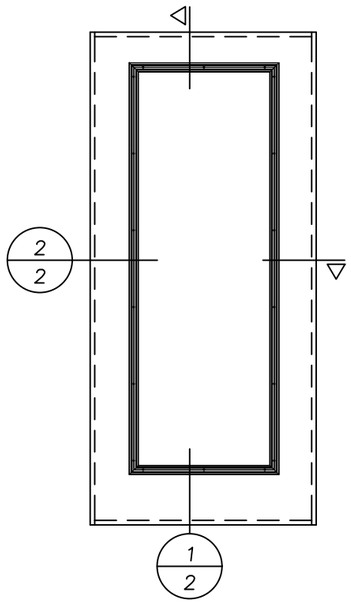

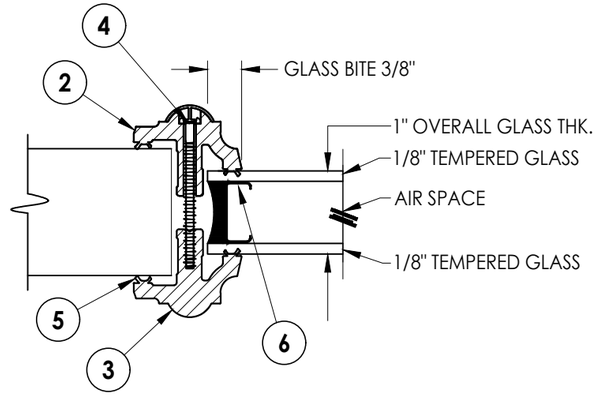

G1 **GLAZING DETAIL**

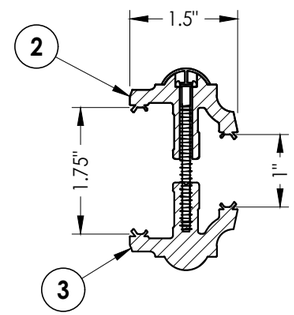

ODL LITE FRAME
PVC

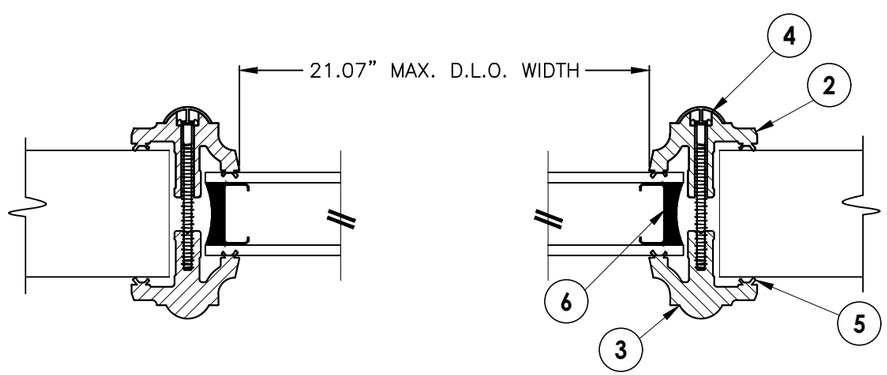

2/2 **HORIZONTAL CROSS SECTION**

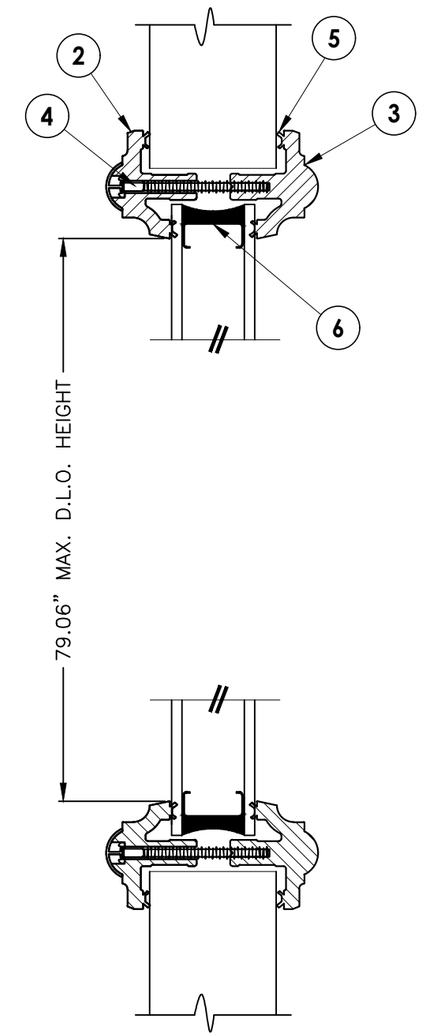

1/2 **VERTICAL CROSS SECTION**

Documents Prepared By:
Lyndon F. Schmidt
P.E. No. 43409

RW BUILDING CONSULTANTS, INC.
P.O. Box 230, Valrico, FL 33595
Phone No.: 813.659.9197
FBPE Registry No. 9813

PRODUCT: ODL LITE FRAME

PART OR ASSEMBLY: HORIZONTAL AND VERTICAL CROSS SECTIONS

NO.	DATE	REVISIONS	BY
5	7/01/26	UPDATE TO 9TH ED. (2026) FBC	LFS
4	7/01/23	UPDATE TO 8TH ED. (2023) FBC	LFS
3	8/05/20	UPDATE TO 7TH ED. (2020) FBC	DAC
2	9/26/17	UPDATE TO 6TH ED. (2017) FBC	JK
1	3/28/15	UPDATE TO 5TH ED. (2014) FBC	JK

DATE: 2/29/12
SCALE: N.T.S.
DWG. BY: JK
CHK. BY: LFS
DRAWING NO.: FL-15260.6
SHEET 2 OF 3

© 2012 R.W. Building Consultants Inc.

G:\ODL\FL-15260 R12\FL-15260.6-7.dwg

BILL OF MATERIALS		
ITEM #	DESCRIPTION	MATERIAL
1A	ODL LITE FRAME (EXTRUDED PVC)	-
1B	ODL LITE FRAME (EXTRUDED PVC)	-
2	INT. FRAME (EXTRUDED PVC)	-
3	EXT. FRAME (EXTRUDED PVC)	-
4	#8 X 1-1/2" PPH SMS	STEEL
5	CO-EXTRUDED SEAL	PVC
6	ALUM GLASS SPACER	ALUM

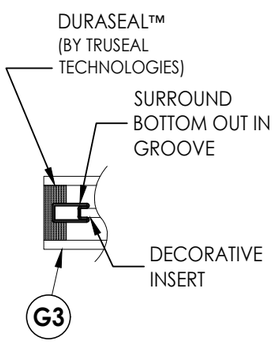

DECOSEAL

Decoseal glazing option may be installed in ODL Frame with max overall width of 24.03" and max overall height of 50.5".

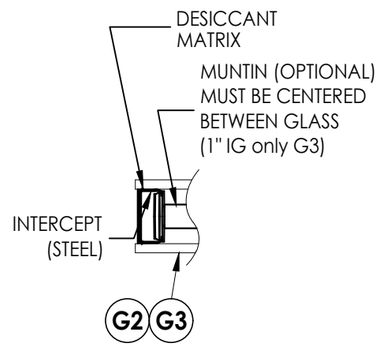

INTERCEPT

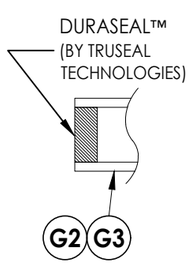

DURASEAL

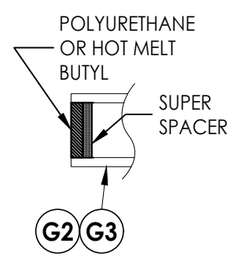

SUPER SPACER

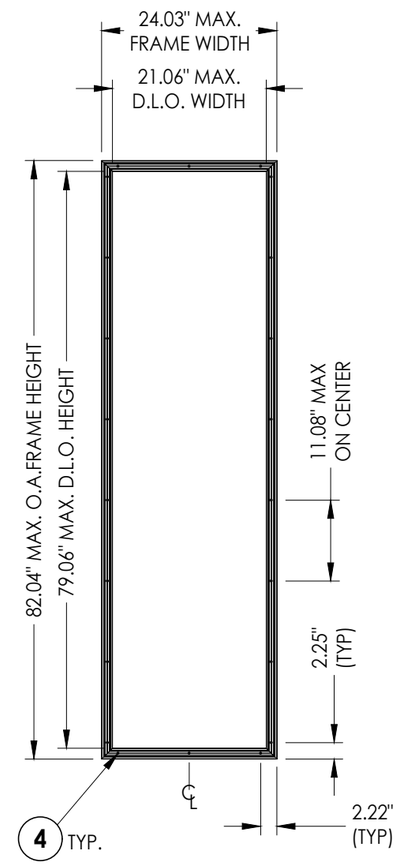

1A ODL LITE FRAME
Install in 8'-0" door panel

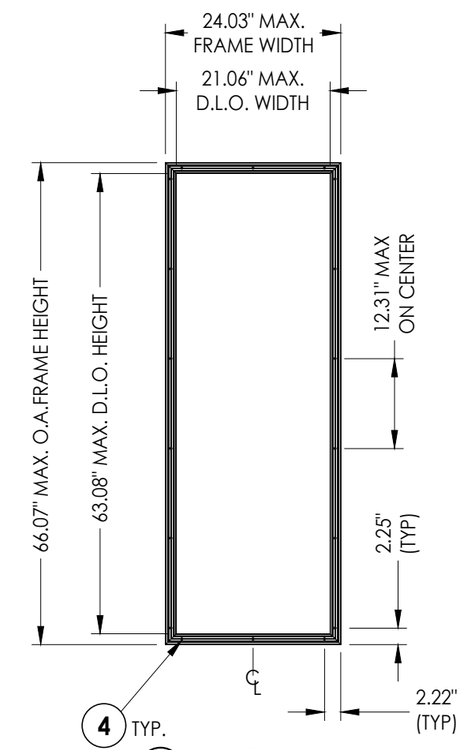

1B ODL LITE FRAME
Install in door panels up to 8'-0" max.

Documents Prepared By:
Lyndon F. Schmidt
P.E. No. 43409

RW BUILDING CONSULTANTS, INC.
P.O. Box 230, Valrico, FL 33595
Phone No.: 813.659.9197
FBPE Registry No. 9813

PRODUCT: ODL LITE FRAME

PART OR ASSEMBLY: ANCHORING LOCATIONS & BILL OF MATERIALS

NO.	DATE	REVISIONS	BY
5	7/01/26	UPDATE TO 9TH ED. (2026) FBC	LFS
4	7/01/23	UPDATE TO 8TH ED. (2023) FBC	LFS
3	8/05/20	UPDATE TO 7TH ED. (2020) FBC	DAC
2	9/26/17	UPDATE TO 6TH ED. (2017) FBC	JK
1	3/28/15	UPDATE TO 5TH ED. (2014) FBC	JK

DATE: 2/29/12
SCALE: N.T.S.
DWG. BY: JK
CHK. BY: LFS
DRAWING NO.: FL-15260.6
SHEET 3 OF 3

© 2012 R.W. Building Consultants Inc.

G:\ODL\FL-15260 R12\FL-15260.6-7.dwg